SPECTRUM CONTROLS

1746sc Isolated-Circuit 24 Vdc Input Module

Catalog No. 1746sc-IB8I

Product Profile

- Installs and operates exactly like an Allen-Bradley product to ensure ease of use and complete compatibility
- Can be used in applications requiring 12–32 Vdc discrete input, sink or source
- "No False On" Circuitry does not give a "false on" when used with proximity switches or other devices with high leakage current.
- Features 1 common per input and 1500 V input-to-input isolation to improve overall system integrity and simplify troubleshooting
- Separate commons allow input types to be mixed, like a relay contact module

The 1746sc-IB8I features 8, separate-common, isolated-circuit inputs. The module works over a broad voltage range for increased versatility. It is designed for use with a wide variety of input devices, such as limit switches, float switches, selector switches, push-buttons, and proximity switches of all types.

Proximity Switch Compatible

The 1746sc-IB8I is specially designed to work with a wide range of 2- and 3-wire proximity switches, as well as other devices that have off-state leakage current. The low switching delay times and "no false on" circuitry provide maximum speed and performance.

Simplifies Installation

The 1746sc-IB8I incorporates proprietary Allen-Bradley technology, so it operates and performs like an Allen-Bradley product for easy installation. The module also allows you to use up to 8 input devices without worrying about whether they're powered by different supplies (something you can only do with an isolated-circuit module).

Reduces System Costs

The 1746sc-IB8I can save you hundreds of dollars on system installation costs. Because the 1746sc-IB8I is an isolated-circuit module, one 1746sc-IB8I can be used with devices of different voltages, power sources, or ground potentials, so you don't need to buy separate modules for use with each circuit.

Spectrum Controls, Inc. • P.O. Box 5533 • Bellevue, Washington 98006 USA • Tel: (425) 746-9481 • Fax: (425) 641-9473
Web Site: www.spectrumcontrols.com • E-mail: spectrum@spectrumcontrols.com

ROCKWELL AUTOMATION ENCOMPASS GLOBAL PARTNER

1746sc-IB8I Specifications

1746sc-IB8I Wiring

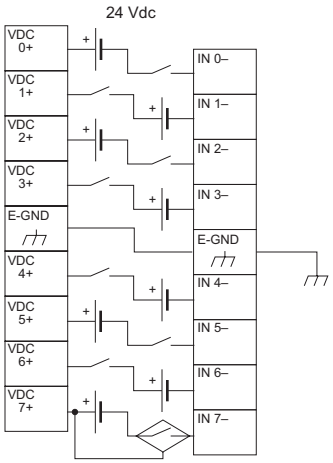

Number of Inputs	8 sink or source
Points per Common	1 (individually isolated)
Voltage Category	24 Vdc
Operating Voltage	± 11.5 to 32 Vdc
Nominal Input Current	12 mA @ 24 Vdc
Input Signal Delay (maximum) Off to On On to Off	 0.5 ms @ 24 Vdc 1.0 ms @ 24 Vdc
Off-state Current (maximum)	1.8 mA
Power Dissipation (maximum)	3 W @ 24 Vdc ②
Backplane Current Draw (max.) 5 V 24 V	0.110 A 0 A
Isolation Voltage	1500 Vac input-to-input 1500 Vac field wiring-to-backplane
Environmental Conditions Operational Temperature Storage Temperature Relative Humidity	 0° to 60°C (32° to 140°F) -40° to +85°C (-40° to 185°F) 5 to 95% (non-condensing)
Certifications	UL/C-UL (Class I, Div 2, Groups ABCD) CE per Council Directive 89/336/EEC for EMC
Conductors Wire Size Category	14 gage stranded maximum 3/64 inch insulation maximum 1 ③
Field Wiring Terminal Block	Blue; removable; A-B part 1746-RT25B (included)
Module ID Code	324

① Maximum allowable leakage current from an input device in an off state.

② Maximum with all 8 inputs turned on (100% duty cycle).

③ Use this conductor-category information for planning conductor routing as described in the Allen-Bradley system-level *Installation and Operation Manual*.

Corporate Headquarters
Spectrum Controls, Inc.
P.O. Box 5533 • Bellevue, Washington 98006 USA
Tel 425-746-9481 • **Fax** 425-641-9473
E-mail spectrum@spectrumcontrols.com
www.spectrumcontrols.com

© 2002-2006 Spectrum Controls, Inc. All rights reserved.
All other trademarks are the property of their respective owners.
Specifications subject to change without notice.

Printed in U.S.A. Publication 0100055-01 Rev B 12/02